North Dakota UST Operator Training

Welcome to the North Dakota Department of Health's Underground Storage Tank Program online Operator Training course. This training program was developed to comply with the requirements of the 2018 North Dakota Underground Storage Tank (UST) rules and to be used by facilities in North Dakota that have regulated underground storage tanks.

This mandatory training module will cover the following topics:

- Monthly Operation and Maintenance
- Financial Responsibility
- Reporting of Cleanups and Leaks
- Leak Detection for Tanks and Piping
- Spill and Overfill Control
- Sumps
- Corrosion Protection
- Emergency Generator USTs
- Tank Closure

After completing the mandatory module, those wishing to be certified as a Class B Operator will need to complete additional training modules. Those modules cover in detail, information specific to the UST systems at your facility.

Underground Storage Tanks

An underground storage tank (UST) system is a tank and any underground piping connected to the tank that has at least 10 percent of its combined volume underground. The North Dakota Underground Storage Tank Rules apply to UST systems storing either a complex blend of hydrocarbons (i.e., gasoline, diesel fuel, waste oil, bio-diesel, ethanol, etc) and certain hazardous substances.

Some exemptions from regulated USTs include tanks less than 110 gallons in size, farm or residential tanks of 1100 gallons or less in size, heating oil tanks and oil water separators. If you have questions regarding the regulatory status of your tanks, you may contact a NDDoH UST Program staff member at 701.328.5166.

UST Operation and Maintenance

Keeping underground storage tank system records is a necessary component to demonstrating compliance with the North Dakota UST Rules.

All compliance and maintenance records must either be kept at the UST facility or a readily available alternative site. The records must be provided for inspection to the North Dakota Department of Health (NDDoH) upon request. For practical help and checklists, refer to the EPA booklet "Operating and Maintaining Underground Storage Tank Systems" available at the NDDoH Underground Storage Tank Program website.

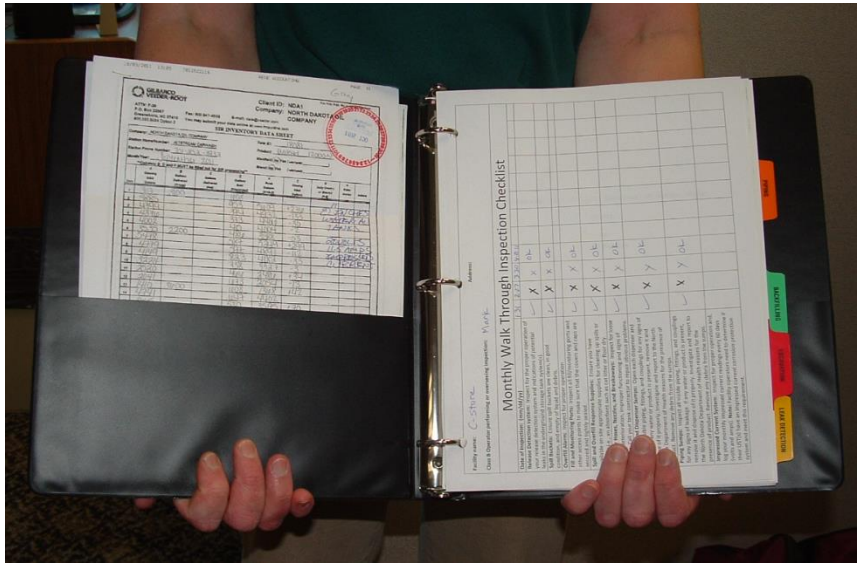

Having all of your UST records organized in a tabbed three-ring binder helps make regulatory inspections go smoothly.

Walkthrough Inspections

No later than April 1, 2021, owners and operators must begin conducting walkthrough inspections as discussed below.

Every 30 days

- Check your spill prevention equipment (i.e. spill buckets) for damage and remove liquid or debris.
- Check for and remove obstructions in the fill pipe.
- Check the fill cap to ensure it is securely on the fill pipe.
- For double-walled spill prevention equipment, with interstitial monitoring, check for a leak in the interstitial area. If your UST system receives deliveries at intervals greater than 30 days, you may check your spill prevention equipment prior to each delivery.
- Check your release detection equipment to ensure it is operating with no alarms or unusual operating conditions (for example ATG consoles or pressure/vacuum gauges). You do not have to check release detection equipment in containment sumps. Release detection equipment in these areas is tested annually.
- Ensure release detection records are reviewed and current.

Annually

- Check your containment sumps for damage and leaks to the containment area or releases to the environment.
- Remove liquid and debris in contained sumps.
- For double-walled containment sumps with interstitial monitoring, check for a leak in the interstitial area.
- Check your hand-held release detection equipment, such as groundwater bailers and tank gauge sticks, for operability and serviceability.

Monthly Operation and Maintenance

In addition to the requirements listed above, you may also want to check the following when performing your walkthrough inspections:

- Fill and monitoring ports: Are covers and caps tightly sealed and locked?
- Spill and overfill response supplies: Do you have the appropriate supplies for cleaning up a spill or overfill?
- Containment areas: Look for significant corrosion on the UST equipment in these areas. Corrosion could result in equipment in the containment area not working properly

In addition, good UST site management should also include the following quick visual checks:

- Dispenser hoses, nozzles, and breakaways: Are they in good condition and working properly?

If you find problems during the inspection, you or your UST contractor must take action quickly to resolve these problems and avoid serious releases.

Monthly Operation and Maintenance

A copy of the following "Monthly Walk Through Inspection Checklist" is available at the NDDoH Underground Storage Tank Program website.

MONTHLY WALK-THROUGH INSPECTION CHECKLIST
North Dakota Department of Health
Division of Waste Management – Underground Storage Tank Program (Page 1 of 2)
Revision: 01/2012

Facility Name: _____ **Facility Location Address:** _____

Class B Operator Performing or Overseeing Inspection (print name): _____

Date of Inspection: mm/dd/yy)												
Release Detection System: Inspect for the proper operation of your release detection system and indications of potential leaks in the underground storage tank system(s).												
Spill Buckets: Ensure spill buckets are clean, in good condition, and empty of liquid and debris.												
Overfill Alarm: Inspect for proper operation.												
Fill and Monitoring Ports: Inspect all fill/monitoring ports and other access points to make sure that the covers and caps are secured and tightly sealed.												
Spill and Overfill Response Supplies: Ensure you have available on site appropriate supplies for cleaning up spills or overfills; i.e., an absorbent such as cat litter or floor dry.												
Dispenser Hoses, Nozzles, and Breakaways: Inspect for loose fittings, deterioration, improper functioning and signs of leakage. Call your tank contractor to repair obvious problems.												
Dispenser and Dispenser Sumps: Open each dispenser and inspect all visible piping, fittings, and couplings for any signs of leakage. If any water or product is present, remove it and dispose of it properly. Investigate and report to the North Dakota Department of Health reasons for the presence of product. Remove any debris from the sumps.												
Piping Sumps: Inspect all visible piping, fittings, and couplings for any signs of leakage. If any water or product is present, remove it and dispose of it properly. Investigate and report to the North Dakota Department of Health reasons for the presence of product. Remove any debris from the sumps.												
Impressed Current System: Inspect for proper operation and log your monthly impressed current readings every 60 days (volts and amps). **Note:** Facility operators need to determine if their UST(s) have an impressed current corrosion protection system and meet this requirement.												

Financial Responsibility

The Petroleum Tank Release Compensation Fund (PTRCF) was established by the 1989 Legislature to financially assist petroleum tank owners/operators for the cost they incur for cleanup in the event of a petroleum release. The fund was established to carry a major share of cleanup costs.

Both underground storage tanks and aboveground storage tanks are covered by the Fund. An owner/operator must register all petroleum tanks owned or operated by them and pay an annual registration fee for each tank prior to the discovery of a release.

Tanks that are excluded from the fund are:

- Federal government tanks;
- Portable tanks;
- Pipeline facility tanks;
- Underground farm or residential tanks of 1100 gallons or less for noncommercial purposes;
- Aboveground farm or residential tanks of any size used for non-commercial purposes (however the owner may join the fund).
- Heating fuel tanks for use on the premises where stored;
- Propane tanks; and
- Certain other tanks not mentioned on this list (contact the fund for more information).

It is mandatory for all owners/operators to register their eligible petroleum tanks with the PTRCF.

For further details and information about the Petroleum Tank Release Compensation Fund, contact the Fund Administrator at 701.328.9600.

Financial Responsibility

Owners or operators of petroleum underground storage tanks must demonstrate financial responsibility for taking corrective action and for compensating third parties for bodily injury and property damage caused by accidental releases arising from the operation of petroleum underground storage tanks in at least the following annual aggregate amounts:

- For owners or operators of one to one hundred petroleum underground storage tanks, one million dollars; and
- For owners or operators of one hundred one or more petroleum underground storage tanks, two million dollars.

Reporting and Cleanup of Releases, Spills and Overfills

Facility owners and operators should be fully prepared to respond to releases **before** they occur. Owners and operators should know what to do when their UST release detection methods indicate a suspected or confirmed release. They must be ready to take the following steps:

Stop the release

- Take immediate action to prevent the release of more product;
- Turn off the power to the submersible pump, the dispenser, and bag the nozzle;
- Make sure facility operators know where the emergency shutoff switch is located;
- If necessary, empty the tank with the assistance of a fuel supplier or distributor.

Contain the release

- Contain, absorb, and cleanup any surface spills or overfills. The owner should keep enough absorbent material at each facility to contain spills and overfills of product.

Reporting and Cleanup of Releases, Spills and Overfills

Tank owners and operators are ***required to report suspected releases*** to the NDDoH within **24 hours** of their discovery. *The Health Department can be contacted at: 701.328.5166. For spills occurring after hours or weekends call 701-527-1831.*

A release is suspected when:

- Petroleum product is discovered at the UST site or surrounding areas in the form of:
  - liquid petroleum on the ground surface;
  - soil contamination;
  - surface water or groundwater contamination; or
  - petroleum vapors in sewers, basements, or utility lines.

- Unusual operating conditions are observed by the tank owner or operator such as the erratic behavior of fuel dispensers, the sudden loss of product from the tank system, or an unexplained presence of water in the tank.

- The monitoring results from a release detection method indicates a release may have occurred.

Reporting and Cleanup of Releases, Spills and Overfills

Any spill or overfill of petroleum that ***exceeds 25 gallons*** or spills that cause a sheen on nearby surface water must be reported to the NDDoH (701.328.5166) within **24 hours**. Spills and overfills under 25 gallons that are contained and immediately cleaned up do not have to be reported.

Facility operators should contact the local fire or emergency response authority as circumstances require. These telephone numbers should be prominently posted where employees can easily see them.

Oil sorbent pads only soak up oil. They repel water and can be used to soak up spills if it is raining or the spill occurs in a wet area.

These products can be used to soak up petroleum. They must be cleaned up as soon as the petroleum is absorbed.

Release Detection for Tanks and Piping

Underground storage tank (UST) facility owners and operators are required to check for leaks in their tanks and piping that may cause a release. A release means any spilling, leaking, emitting, discharging, escaping, leaching, or disposing from an UST and connected underground piping into groundwater, surface water, or soil.

The release detection method must be able to detect a leak from any portion of the underground storage tank and connected underground piping that routinely contains product.

Note: release detection is not required on the piping of gravity fed tanks such as a waste oil tank.

Measuring the amount of fuel in a tank

Release Detection for Tanks and Piping

Requirements and Best Management Practices for Release Detection

- ✓ Underground storage tank (UST) facility owners and operators must be able to determine at least every 30 days whether or not their tank and piping are leaking by using proper release detection methods.

- ✓ You must keep records of release detection testing for at least one year.

- ✓ Release detection equipment must be installed, calibrated, operated, and maintained according to the manufacturer's instructions. Keep all schedules of required calibration and maintenance provided by the equipment manufacturer for at least five years. Keep all records of calibration, maintenance, and repair for at least one year after the activity occurred.

- ✓ If you ever suspect or confirm a leak, you must take appropriate action and, if necessary, report the release. **Never ignore release detection alarms or failed release detection tests. Treat them as potential leaks!**

Requirements and Best Management Practices for Release Detection

- ✓ Make sure your vendor or installer provides you with the information and training necessary to make sure your release detection equipment works effectively to detect leaks.

- ✓ Make sure employees who run, monitor, or maintain the release detection system know how to run, monitor, or maintain the equipment and to whom to report problems. Develop and maintain regular training programs for all employees.

- ✓ Periodically have a qualified UST contractor, such as the vendor who installed your release detection system, service your release detection equipment according to the manufacturer's service instructions. Components can wear out and must be checked periodically. Many vendors recommend or require this maintenance activity at least annually.

Annual Testing for Release Detection Equipment

No later than April 1, 2021, all release detection equipment must be inspected and tested annually to ensure the equipment is operating properly and will prevent releases to the environment. In most cases the testing will be performed by a qualified service technician.

A test of the proper operation must be performed, as applicable to the facility, to cover the following equipment and criteria:

- Automatic tank gauge and other controllers: test alarm; verify system configuration; test battery backup;
- Probes and sensors: inspect for residual buildup; ensure floats move freely; ensure shaft is not damaged; ensure cables are free of kinks and breaks; test alarm operability and communication with controller;
- Automatic line leak detector: test operation to simulate a leak;
- Vacuum pumps and pressure gauges: ensure proper communication with sensors and controller; and
- Hand-held electronic sampling equipment associated with groundwater and vapor monitoring: ensure proper operation and calibration.

Spill Buckets

Tank owners and operators are responsible for ensuring that fuel spills or overfills do not occur during fuel deliveries. A spill bucket is used to catch small spills during fuel deliveries.

A spill bucket is a liquid-tight container that surrounds the fill pipe. They typically range in size from 5 to 25 gallons, and are there to catch and contain any small leaks, drips and spills from the delivery hose during the fuel delivery process.

The spill bucket is not designed to contain fuel for long periods of time. After each delivery, operators should empty and dispose of the contents properly.

Spill buckets must be kept clean of debris and free of cracks and holes.

All tanks must be equipped with a spill bucket if the tank system is filled by transfers of **more** than 25 gallons at one time.

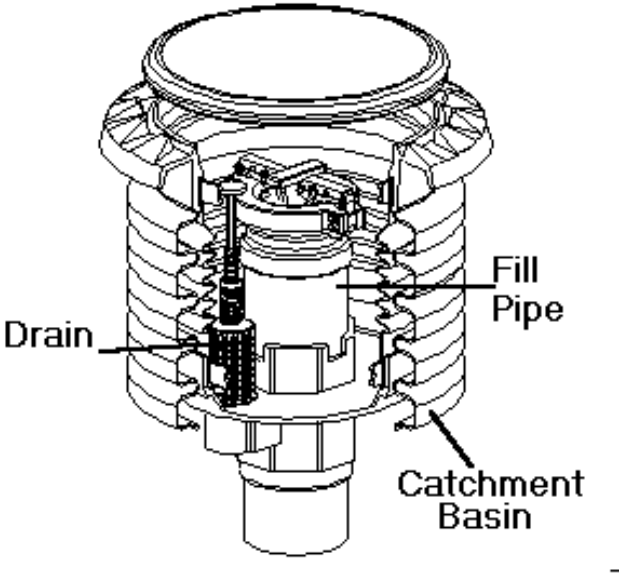

Spill Bucket Testing

No later than April 1, 2021, all spill prevention equipment (such as a catchment basin, spill bucket, or other spill containment device) must be tested to ensure the equipment is operating properly and will prevent releases to the environment by meeting one of the following:

- If the spill prevention equipment is double walled, check the interstitial space every 30 days.
- If the spill prevention equipment is single walled, test at least once every three years to ensure the equipment is liquid tight by using vacuum, pressure, or liquid testing. In most cases the testing will be performed by a qualified service technician.

Overfill Prevention

The underground storage tank (UST) rules require that an overfill prevention device must be installed on all tanks that are filled by fuel transfers of more than 25 gallons at one time.

Since tank owners and operators are responsible for ensuring that fuel overfills do not occur, the overfill prevention device is essentially the BACKUP if the right amount of fuel is not ordered or delivered.

The function of overfill prevention devices is to stop or restrict the flow of product into the tank or alert the operator BEFORE the tank is filled to the top. There needs to be enough room in the tank to drain the fuel left in the delivery hose after the fuel transfer is complete.

There are three types of overfill protection devices:

1. Automatic shutoff devices (also known as drop tube shutoff devices or “flapper” valves);
2. Overfill alarms (electronic alarms); and
3. Ball-float valves (also known as float-vent valves). Ball-float valves can no longer be used on new tank installations.

The operator must determine what type of overfill prevention is installed on the UST system.

Overfill Prevention Testing

No later than April 1, 2021, all overfill prevention equipment must be inspected and tested at least once every three years. At a minimum, the inspection must ensure that overfill prevention equipment is set to activate at the correct level specified and will activate when regulated substances reach that level.

Sumps

A sump is a below ground chamber that provides access to tank system components and, when contained, prevents liquids from escaping into the environment. Sumps, including the sumps beneath dispensers, sumps around the submersible pump (turbine) head, transition/intermediate sumps, and spill buckets are common sources of leaks. Leaks of even small volumes of product can seep into the ground and contaminate soil and groundwater. Inspecting and maintaining your sumps can prevent or minimize such releases.

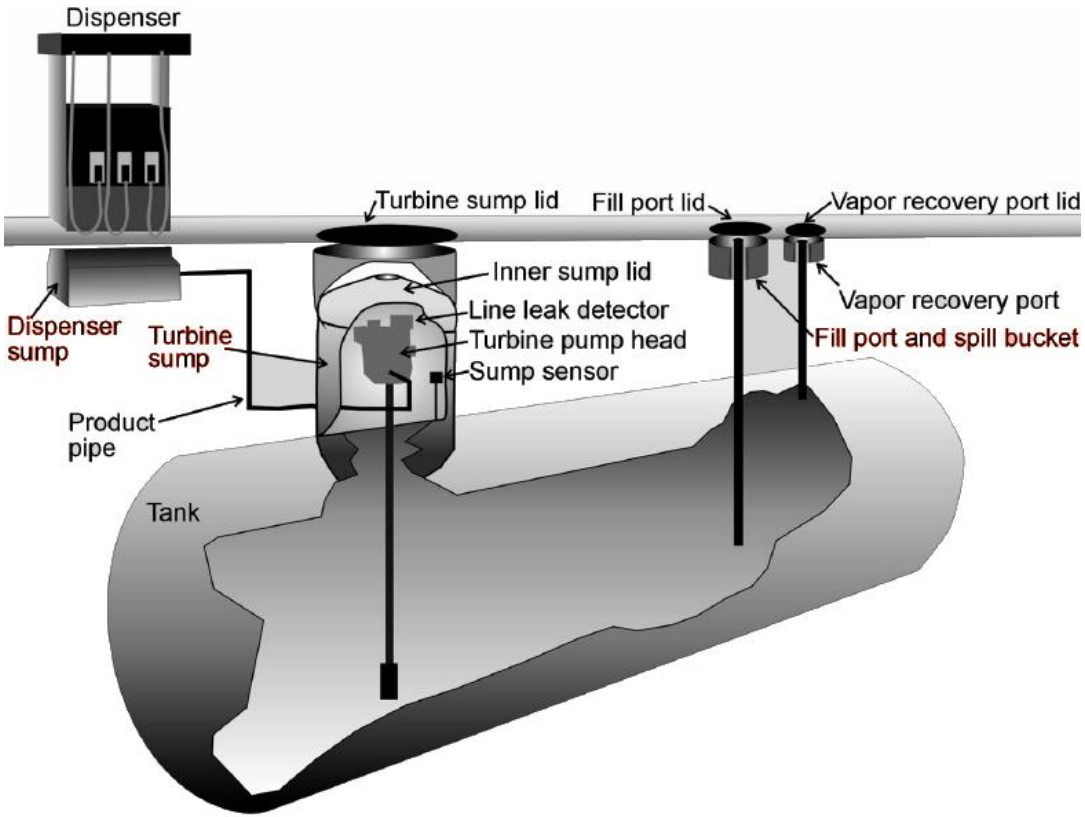

Sumps

Sumps may or may not be contained. Contained sumps have sides and a bottom, are designed to be liquid tight, and may have a special cover designed to keep out water. Uncontained sumps generally do not have a bottom and are not designed to prevent liquid from entering or exiting the sump. These sumps may use wooden or metal sheeting to restrict the slumping of soil or crushed rock onto the equipment and to prevent the surface pavement from buckling or caving.

Maintaining your sumps and spill buckets will involve gaining access to them, inspecting them on a regular basis, assessing whether any problems exist, and ensuring any problems are addressed. For serious problems (e.g., obvious leaks occurring in the piping or equipment, cracked spill buckets or sidewalls, a cracked or missing seal around the lid), it's best to contact your UST contractor or the manufacturer of your UST equipment to have the problem fixed.

Corrosion Protection

All regulated tank systems (tanks and piping) that are underground and routinely contain product are required to be protected from corrosion. You can protect the tanks from corrosion in several ways. The tanks may be:

- Metal that is cathodically protected.
- Made of fiberglass reinforced plastic.
- Metal that is jacketed or clad with a non-corrodible material such as fiberglass.

You can protect the piping from corrosion in two ways. It may be:

- Made of non-corrodible material such as fiberglass or flexible plastic.
- Metal that is cathodically protected and properly coated.

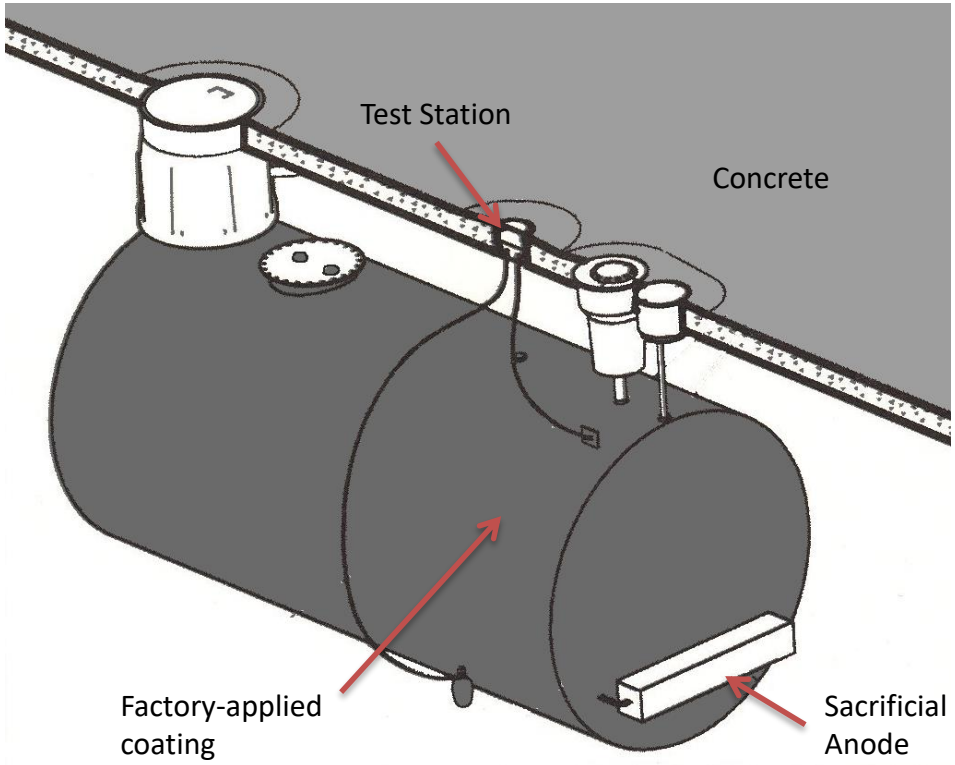

A sacrificial anode cathodic protection system on a metal tank which consists of a factory-applied coating to separate the metal from the environment and a sacrificial anode to protect the imperfections in the coating.

Corrosion Protection

Cathodic protection is a technique used to control the corrosion of a metal surface. For metal components of underground storage tank systems there are two options for cathodic protection: galvanic "sacrificial" anodes or impressed current. Both of these techniques are discussed in more detail in the corrosion protection module.

If your UST system has metal components that need cathodic protection, you are required to ensure that the cathodic protection is working to protect the metal components from corrosion. A test of the cathodic protection system is required to be performed by a qualified tester every three years. Monitoring of cathodic protection is necessary to determine that the system is operating properly.

In order to demonstrate compliance with the testing and inspection requirements, the regulations require the last two test results to be documented and kept at the facility.

In North Dakota, most double walled-tanks and piping do not require cathodic protection because the inner walls of the tank and piping, which contain the fuel, are not in contact with the ground and interstitial monitoring is used as release detection.

Emergency Generator USTs

Underground storage tanks larger than 110 gallons that are used to store fuel for an emergency generator are regulated under the North Dakota Underground Storage Tank Rules. All of the North Dakota UST Rules apply to these tanks including spill/overfill requirements, corrosion protection requirements, financial responsibility requirements, spill reporting requirements, and release detection*.

*Beginning April 1, 2018, all newly installed emergency generator tanks are required to check for leaks in their tanks and piping.

*No later than April 1, 2021, all *existing* emergency generator tanks will be required to check for leaks in their tanks and piping.

You must keep records of release detection testing for at least one year.

Temporary Closure

When an underground storage tank (UST) is temporarily closed, the Department must be notified of the temporary closure. Upon temporary closure, owners and operators must continue with the operation and maintenance of corrosion protection, release detection, and release reporting, response, and investigation if a release is confirmed. However, release detection is not required if the underground storage tank is emptied of its contents using commonly employed practices. When an underground storage tank system is temporarily closed for more than three months, in addition to the above requirements, the owner/operator must leave vent lines open and functioning, and cap and secure all other lines, pumps, manways, and ancillary equipment.

Upon bringing the UST back into service, the Department again must be notified of the change in status of the tank system.

Permanent Closure

When an UST is permanently closed, the owner/operator must give notice to the Department of the planned removal in writing 30 days prior to the closure, followed by a telephone call to the Department 5 working days before the removal. With this notice, the Department will schedule an inspector from our office to be on site to perform the required contamination assessment. Prior to the closure, the tank contents must be removed and the tank inerted or rendered safe from potential explosive conditions. This is typically performed by your tank contractor before the closure. During the removal, the Department inspector will measure for the presence of petroleum contamination and oversee the removal of any contaminated soil. If sufficient contamination is removed, the Department will close the site upon completion and submittal of the required closure documentation.

Tank removals were common in North Dakota prior to 1998.

Closure documentation includes an amended Notification Form (SFN-10980) and a Tank Removal Form (SFN-16932). In the event sufficient contaminated soil cannot be removed during the tank closure or evidence of ground water contamination is discovered, additional investigation of the release may be requested by the Department.

Notification Requirements

An owner must submit notice of a tanks system's existence to the Department within 30 days of bringing the UST into use.

Within 30 days of a change of ownership, any person who assumes ownership must submit notice of the ownership change to the Department.

Repairs to Tanks or Piping

Owners and operators of underground storage tank systems must ensure that repairs will prevent releases due to structural failure or corrosion as long as the underground storage tank system is used to store regulated substances.

Within 30 days of a repair, you must prove that a tank is repaired by:

- Having the tank inspected internally or tightness tested following standard industry codes; or
- Using one of the monthly release detection monitoring methods.

Within 30 days after repairs to secondary containment areas of tanks, you must have the secondary containment tested for tightness.

Within 30 days after repairs to spill or overfill prevention equipment, you must test or inspect the repaired spill or overfill prevention equipment, as appropriate, to ensure it is operating properly.

Underground storage tank system owners and operators must maintain records of each repair until the underground storage tank system is permanently closed or undergoes a change in service.